Espacenet my patents list on 08-04-2015 09:28

21 items in my patents list
Displaying selected publications

Publication	Title	Page
GB190627023 (A)	Improvements in Fishing Reels and oth...	2

N° 27,023 A.D. 1906

Date of Application, 28th Nov., 1906

Complete Specification Left, 18th May, 1907—Accepted, 24th Oct., 1907

PROVISIONAL SPECIFICATION.

Improvements in Fishing Reels and other Rotating Drums or Winches Requiring a Brake

I FRANK BAKER 28 & 29 St. Paul's Square Birmingham in the County of Warwick, Manufacturer, do hereby declare the nature of this invention to be as follows:—

This invention has relation to the break or check on a fishing reel or other drum or reel regulating the flow of line from the reel or drum by means of an internal break operating through apertures in an inner barrel or spindle, upon the inner surface of an outer barrel or tube carrying drum or reel & acting as a bearing. The spindle of the reel is a tube fixed to the backplate of the frame or body upon which tube, runs the drum or line reel carrying as a bearing a larger tube sliding over fixed tube or spindle. The spindle tube contains an expanding U shaped spring which carries two steel break shoes on its outer extremities which act upon the inner surface of the tube in the drum or line reel through holes in the spindle tube which break is operated by a screw working in a thread inside the spindle or inner tube the tapered end of which screw forces open the U of spring and causes the break shoes to press against the inner surface of the tube in the drum or line reel. Through the tapered screw runs a sliding pin the end of which bears inside the end of the U spring attatched to the break shoes and when pressed inwards draws them off the tapered end of screw and releases break the holes in spindle being elongated to allow a sliding movement. A spiral spring is placed behind end of U spring which returns the break shoes to position adjusted by taper screw making the break removeable & renewable at will without altering tension of thumb screw. This release mechanism may be left out in the simple form.

I also obtain a release of the centre break by a quick thread on the push pin instead of spring so that the release is obtained by turning the pin passing through the taper screw & engaging in the bottom of the U spring & returning again to first position for break.

Dated this Tenth day of November 1906.

FRANK BAKER,
Birmingham.

COMPLETE SPECIFICATION.

Improvements in Fishing Reels and other Rotating Drums or Winches, Requiring a Brake

I, FRANK BAKER, of 28 and 29 Saint Paul's Square, in the City of Birmingham, Warwickshire, Manufacturer, do hereby declare the nature of this invention and in what manner the same is to be performed, to be particularly described and ascertained in and by the following statement:—

This invention relates to improvements in the construction of fishing reels

[*Price 8d.*]

and other rotating drums or winches requiring a brake and refers to that class or type in which brake mechanism is employed consisting of internal expanding pressure members passing through apertures in the inner tube or spindle, and bearing against an outer tube or bearing, and its object is to simplify the construction of such mechanism, as hereinafter described.

In order to more clearly explain this my invention I have appended hereunto an illustrative sheet of drawings, upon which are figures and numbers of reference, similar numbers referring throughout the several views to the same thing or part, and in which:—

Fig 1 is a view in elevation of a reel constructed according to this my invention. Fig 2 is a cross sectional elevation of the reel on line A—B. Fig 3 shows a cross sectional elevation of the reel on line C—D. Figs 4 and 5 respectively show side and plan views of the expanding spring shoes. Fig 6 is a cross sectional elevation of the reel similar to that shown in Fig 2, but further showing a quick brake releasing device. Fig 7 shows a modified form of quick brake releasing device.

8 is the reel, within which is fixed the (steel) lining 8^a, the latter having the usual click wheel 9 at its one end. 10 is the frame, to which the central tube 11 is screwed at its one end, the said tube forming the tubular spindle upon which the reel (and its fixed lining) revolves. In this tube 11 two or more openings are made through its side, to accommodate a corresponding number of shoes 12 upon the spring 13. This spring when compressed permits the whole being passed into the tube until the shoes are fair with the holes when they spring thereinto. 14 is a screw pin, having a manipulating head 15 and a taper shaped end 16. This pin screw-wise engages with the interior of the tubular spindle 11, and its front taper end 16 engages with the interior of the spring 13, so that the latter may thereby be opened, thus forcing the shoes 12 against the inside of the lining 8^a, to obtain the desired brake effect, or withdrawn, to release such brake application.

The other parts of the reel are of ordinary construction and operation.

Referring now to Fig 6, 17 is a sliding pin which passes through the tapered pin 14, and further through the tapered portion 16, so that its front end 17^a presses against the inner end of the spring 13. I further provide upon this pin 17 a spiral spring 18, which shall ensure the said pin being lightly pressed forward so as always to press against the inside of the aforesaid spring 13. I also provide between the end of the spring 13 and the outer end or cover piece 19 the spiral spring 20, which shall tend always to push the spring 13 back to its normal position at the far end of the slot holes 11. Consequently by screwing in the pin 14 the shoes 12 are expanded outwards to give the brake action as before described, but should it be desired to quickly release the said brake force, the pin 17 may be pushed inwards so as to press the spring 20 and thus push the shoes 12 from off the tapered pin 16, thus immediately releasing the brake. Upon letting go however the pin 17 the spring 20 will immediately push back the spring 13, so that the shoes 12 again assume their preadjusted position.

Instead of using the spring 17 as a sliding pin I may form thereon a quick screwthread, as seen at 17^b, the screw 14 serving as a nut. In this case the pin 17^c is rotated in order to push back the spring 13 for releasing purposes, and unscrewed to permit the shoes 12 resuming their preadjusted position.

Having now particularly described and ascertained the nature of my said invention, and in what manner the same is to be performed, I declare that what I claim is:—

1. In fishing reels and other rotating drums or winches, the employment of a spring 13 within the central tubular spindle, and carrying two or more pressure shoes, said spring being operated by taper ended screw pin 15, all as set forth and shown, and for the purposes specified.

2. In fishing reels and other rotating drums or winches, the combination with the reel, a tubular spindle, an expansible spring having shoes at its one end passing through said tubular spindle, an expanding screw pin engaging within said shoes, of the releasing push pin 17 and return spring 20, all constructed and operating as set forth and shown.

3. The modified form of quick releasing pin 17c in combination with the screw adjusting pin 14, shoes 12 carried upon spring 13, and return spring 20, constructed and operating as set forth and shown.

Dated this 17th day of May 1907.

CHARLES T. POWELL,
Agent for the Applicant.

Redhill: Printed for His Majesty's Stationery Office, by Love & Malcomson, Ltd.—1907.

A.D. 1906. Nov. 28. N.º 27,023.
BAKER'S COMPLETE SPECIFICATION. (1 SHEET)

[This Drawing is a reproduction of the Original on a reduced scale.]

Fig. 1

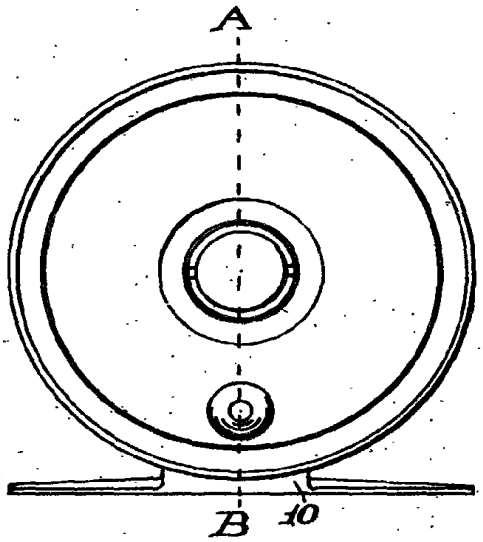

Fig. 2

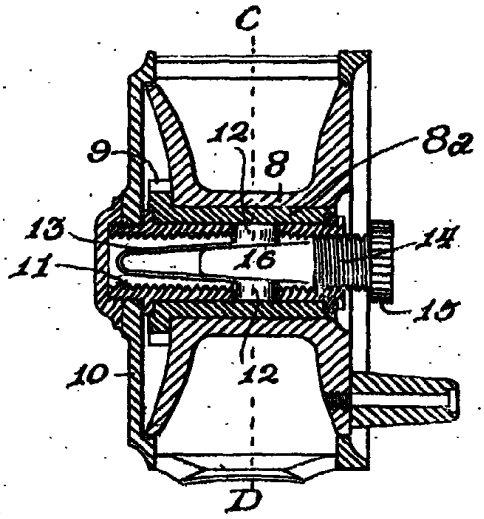

Fig. 3

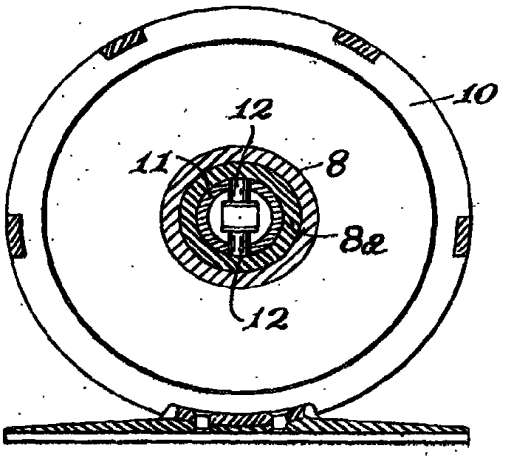

Fig. 4

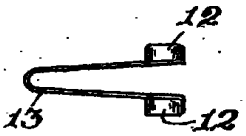

Fig. 5

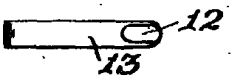

Fig. 6

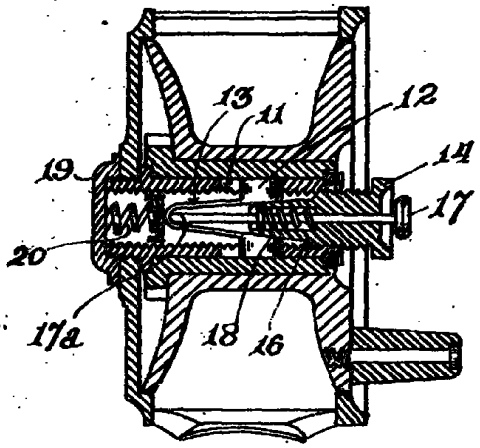

Fig. 7

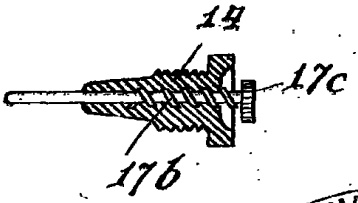

Malby & Sons, Photo-Litho.